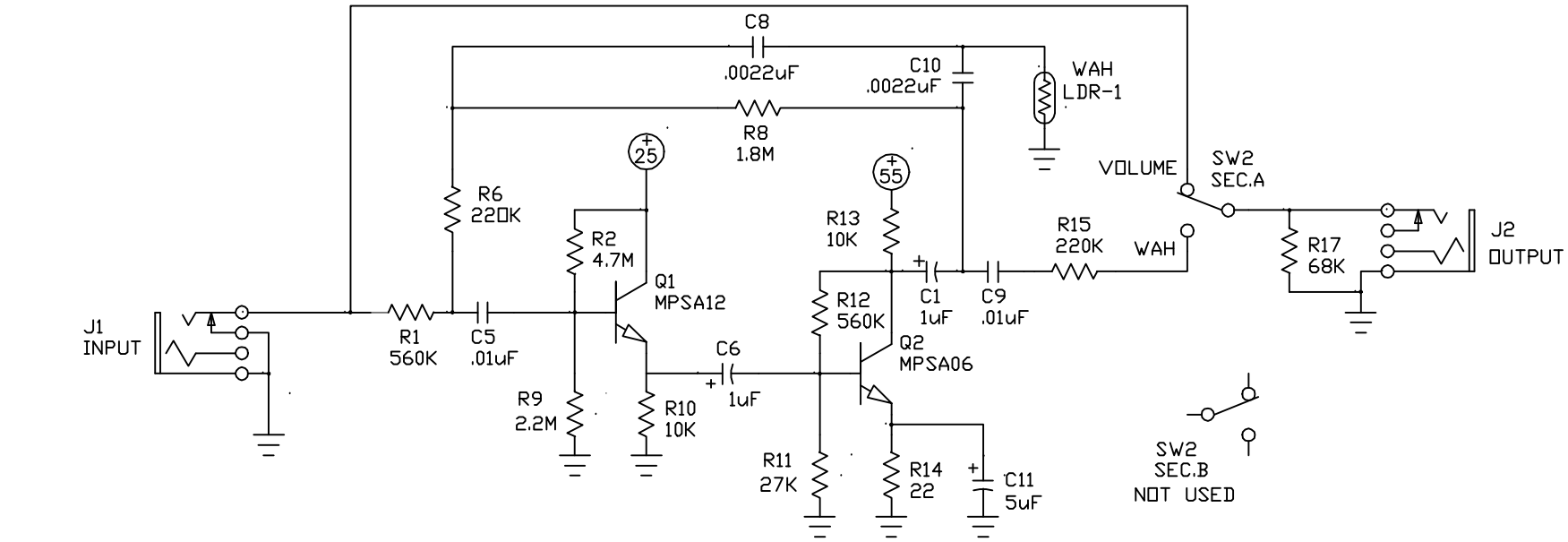

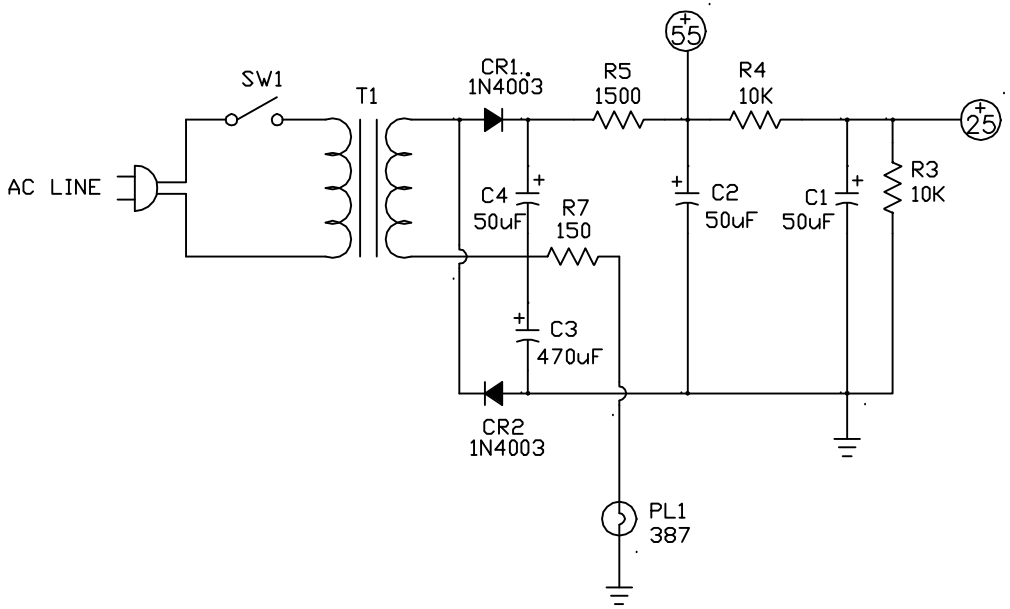

MORLEY

SCALE: N.T.S.	APPROVED BY R.L.	DRAWN BY S.F.
DATE: 5-11-76		REDRAWN 1-3-01

DESCRIPTION: POWER WAH - PWO

PART NUMBERS: SK51176A

FILE NAME: PWO.DWG

TEL RAY ELECTRONICS MFG. CO., INC.