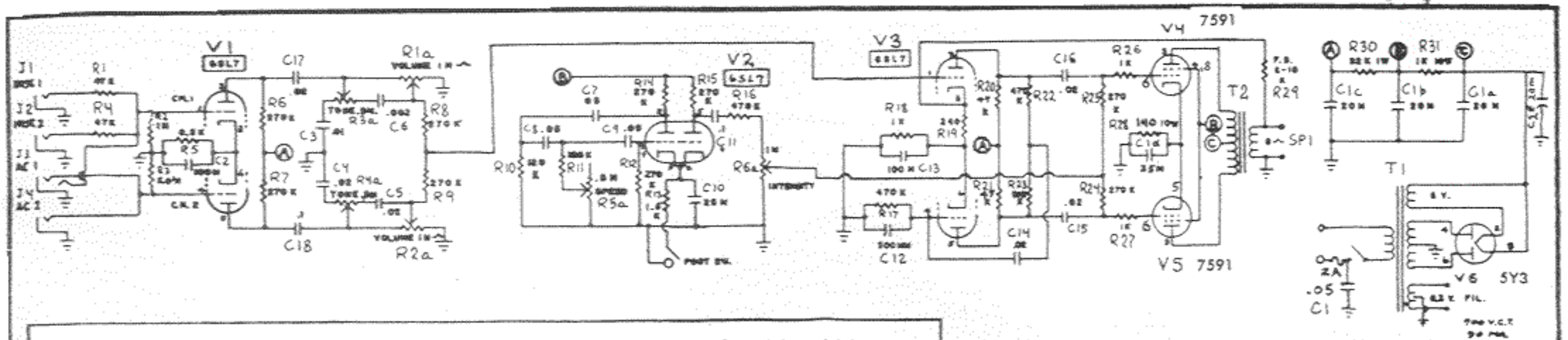

MODEL NO. M-12-A

Tube Location (from left to right)

6SL7 6SL7 6SL7 7591 7591 5Y3

Ampeg