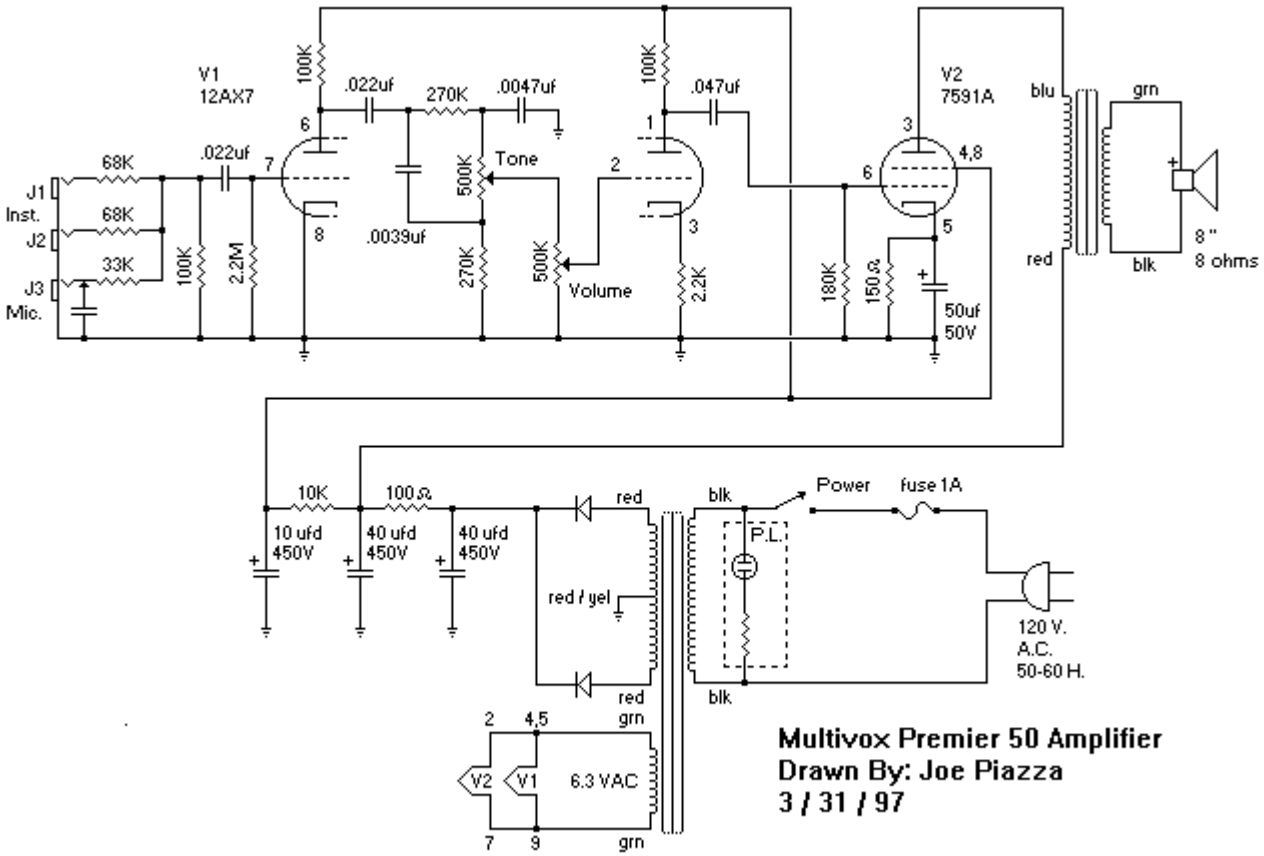


**Multivox Premier 50 Amplifier**
**Drawn By: Joe Piazza**
**3 / 31 / 97**